NOTES:

1. NO KNOCKOUTS REMOVED.
2. LOCATION OF IMPELLER TO BE .200/.120 FROM EDGE OF MOUNTING CUP TO EDGE OF IMPELLER.
3. COIL LEADS INSIDE CONDUIT BOX AND SECURE PC 329 COVER WITH PC 325 SCREWS AFTER TEST.
4. INDIVIDUAL PACK: 1 PER CONTAINER, 100 MAX. PER PALLET, PACKING ASSY: 87854000, 20 CONTAINERS PER LAYER, 5 LAYERS PER PALLET, P.S. 88834200 AND P.S. 88834408. BULK PACK: 20 PER CONTAINER, 240 MAX. PER PALLET, PACKING ASSY. 87854376, P.S. 88834200 AND P.S. 88834408.
5. CARTON LABELS MUST ALL FACE ONE DIRECTION TOWARD THE OPEN END OF THE PALLET. SEE P.S. 8883 4408.
6. NO PACKAGING TAPE OVER CARTON LABEL.

APPLICATION	B	LA	FR	A	S	C	E	B	A
THERMALLY PROTECTED	06	21	30	F	02	OF	5	3	0

CUSTOMER: FASCO DIST.

CUSTOMER PART NO.: 50748-D500

LEAD MATERIAL
18 GA. 125°C 2/64 INSUL.
X-LINKED POLY. (2) BLACK
8.00/6.00 IN. LONG
.56/.44 IN. LONG

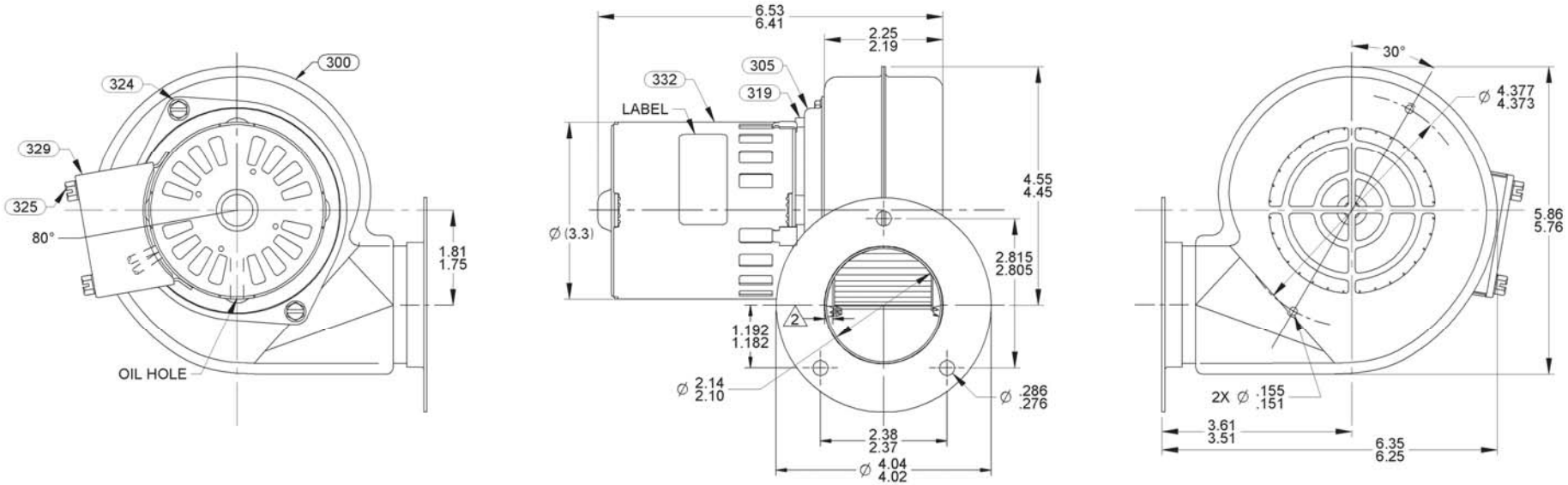

ECO. NO.	REV.	DATE	APPROVAL
4001873	42	5/2/11	MLM/PLA
4008447	43	2/28/2013	SDM/BGP
4008834	44	4/8/2013	KSA/SDM

TYPICAL PERFORMANCE TEST DATA IN FREE AIR

AT 115 VOLTS 60 HZ.

	R.P.M.	WATTS	AMPS
	2860	65	.79

BLOWER WEIGHT 3.8 LBS.

END PLAY .050/.010

UNLESS OTHERWISE SPECIFIED DIMENSIONS ARE IN INCHES TOLERANCES ARE:
FRACTIONS ± 1/16 DECIMALS .XX ± .01 .XXX ± .005 ANGLES ± 1°

APPROVALS		DATE
DRAWN	SDM	09/19/2003
CHECKED	BGP	09/19/2003
FINISH COLOR	BLACK	

FASCO MOTORS GROUP
AC MOTOR/BLOWER DIVISION

CONFIDENTIAL: DO NOT DUPLICATE OR DISCLOSE TO THIRD PARTIES WITHOUT WRITTEN PERMISSION OF FASCO MOTORS GROUP, AC MOTOR/BLOWER DIVISION.

TITLE: BLOWER ASSEMBLY

SIZE: B DWG. NO.: 7021 2588 REV.: 44

DO NOT SCALE DRAWING SHEET 1 OF 1

If Printed, this is an Uncontrolled Document.